Piping Details

B Type Connections **B** Type Supply Left **B** Type Supply Right	**C Type Connections** **C** Type Supply Left **C** Type Supply Right
E Type Connections **E** Type Supply Left **E** Type Supply Right	**Opposite End Series** 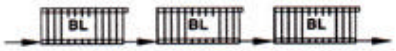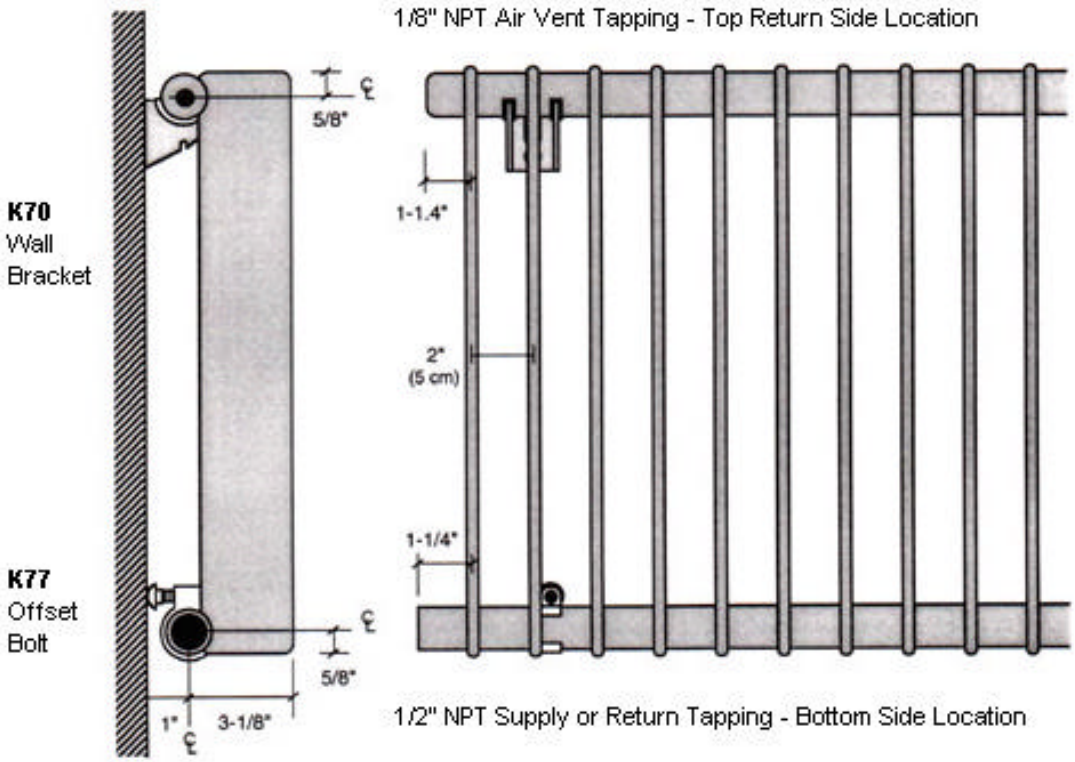 Example: Lefthand Series